ZWS

600 to 2600

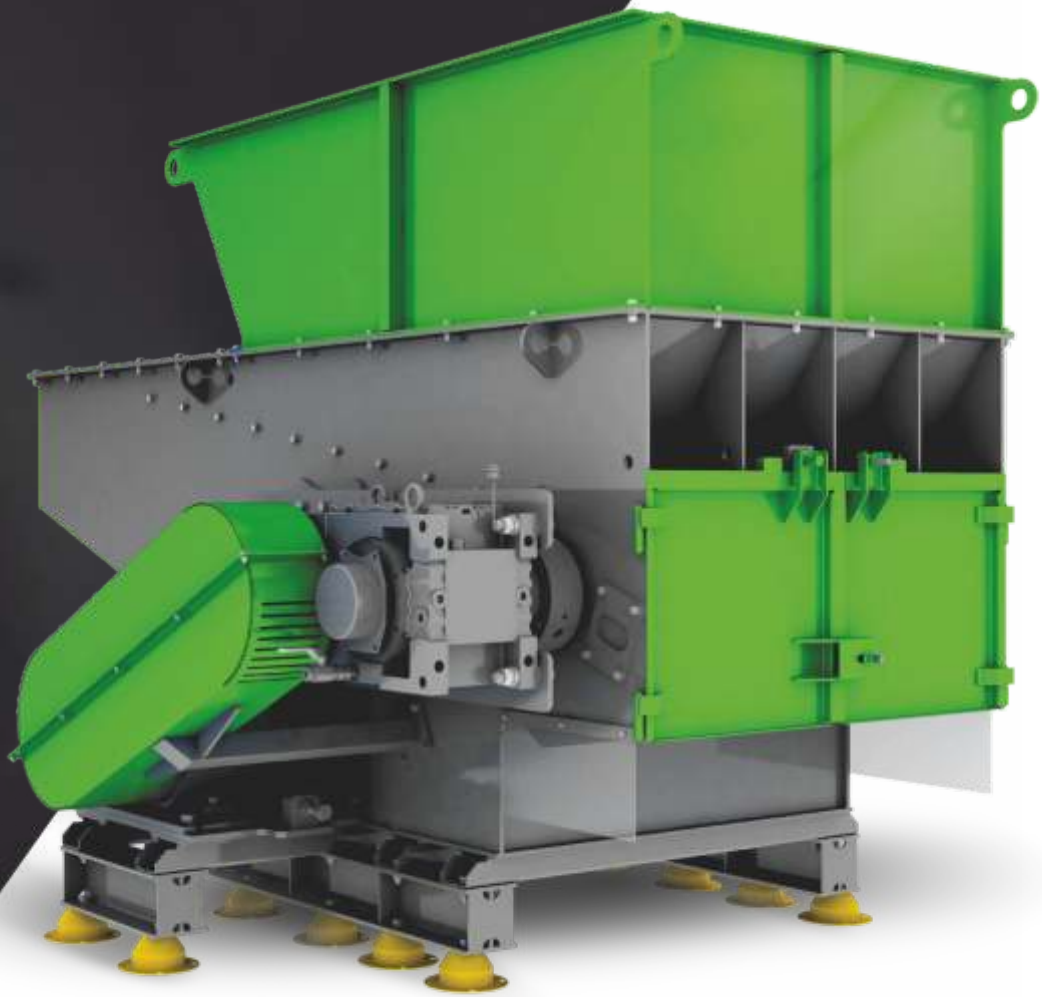

Single-shaft shredders for wood waste on an industrial scale

AMIS ZWS series single-shaft shredders are used in workshops and industrial enterprises in the wood-processing industry to ensure cost-effective recycling of wood waste and many other materials. These machines are designed for heavy duty applications and reliable continuous operation. Each machine is built to customer specifications (material, throughput and screen size).

amis®
RECYCLING TECHNOLOGY

Wood-

SHREDDER

Our series for optimal shredding

ZWS single-shaft shredders
for maximum throughput

Advanced shredding technology

The right solution for any task in a wood processing business

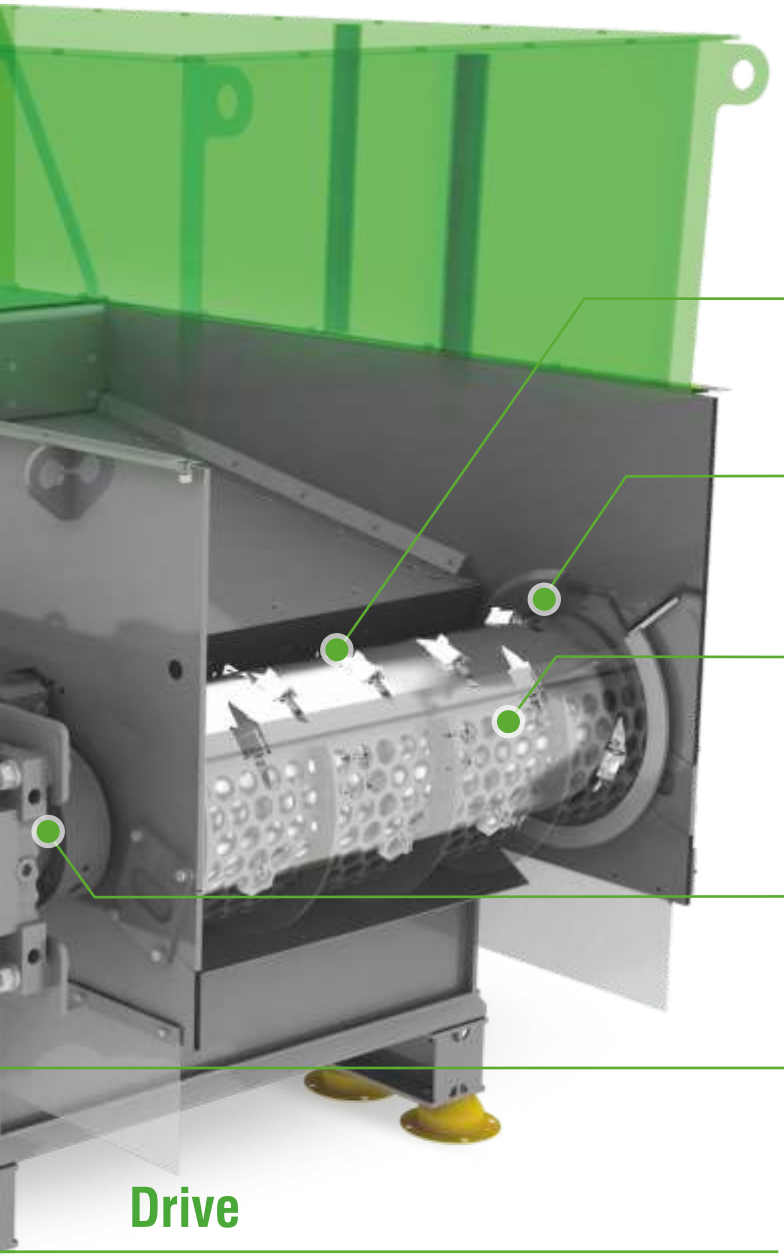

Rotor-/stator knives

Rotor and stator knives can be turned, guaranteeing a long service life; bolted knife holders.

Rotor system

Knife carriers bolted into machined pockets on the rotor for easier maintenance and servicing.

Material output

Replaceable, bolted-on screen with various screen sizes.
Discharge via suction system, discharge screw, conveyor belt or conveyor chain.

Rotor bearing

Pillow block bearing, dustproof.
Sturdy and robust design.

Body

ZWS shredders feature a strong welded steel design with a wall thickness of 10 mm. They are particularly stable and smooth-running, with rubber mountings.

Drive

Rotor is driven via a V-belt and transmission.
Equipped with a safety switch to prevent damage to rotor and transmission caused by foreign material.

AMIS single-shaft shredders operate quietly and produce very little dust. The material to be shredded is introduced (by hand, forklift etc.) into a large hopper. Then the material is fed towards the rotor by the slightly forward-tilted horizontal hydraulic ram, where it is shredded between the rotor and stator knives. The hydraulic ram is load-sensitive and controlled by the current consumption of the drive motor. The screen, which determines the final screen size, is securely bolted into place below the rotor. The shredded material can be discharged optionally via a discharge screw, suction system, conveyor belt or conveyor chain.

ZWS 600 – 2600 Woodshredder

Technical Data

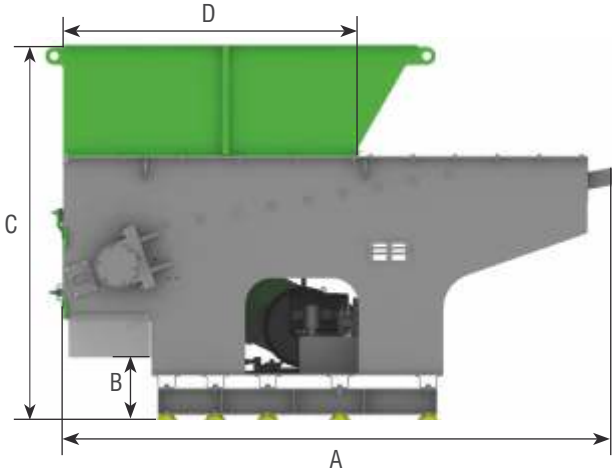

Type ZWS		600	850	1100	1400	1700	2000	2600	2600/600
Hopper opening	(mm)	580 x 1280	860 x 1620	1140 x 1885	1420 x 2195	1640 x 2380	1980 x 2380	2540 x 2785	2540 x 3080
Working cross-section	(mm)	580 x 590	860 x 820	1140 x 1090	1420 x 1430	1640 x 1660	1980 x 1660	2540 x 1660	2540 x 1660
Rotor diameter	(mm)	**404**	**404**	**404**	**404**	**404**	**404**	**404**	**600**
Rotor speed	(rpm)	74 - 120	74 - 120	74 - 120	74 - 120	74 - 120	74 - 120	74 - 120	74 - 120
Drive	(kW)	18,5/22/30	18,5/22/30	22/30/37/45	37/45/55	45/55/75	75/90/110	2x75/2x90	2x90/2x110
Rotor knives	(pcs)	13/26	20/40	27/54	34/68	41/82	48/96	62/124	93/186
Stator knives	(pcs)	1 x 2	1 x 3	1 x 4	1 x 5	1 x 6	1 x 7	1 x 9	1 x 9
Hydraulck	(kW)	1,5	1,5	1,5	5,5	5,5	5,5	7,5	7,5
Screen	(mm)	10 - 100	10 - 100	10 - 100	10 - 100	10 - 100	10 - 100	10 - 100	10 - 100
Connection-Ø	(mm)	150	200	200	250	250	250	250	250
Weight approx.	(kg)	1700	2600	3500	6200	7000	10200	10800	15000
Dimensions									
A	(mm)	2060	2719	3270	4080	4930	4330	4330	4420
B	(mm)	400	400	440	460	460	460	600	700
C	(mm)	1740	1826	1920	2170	2430	2240	2380	2730
D	(mm)	1280	1620	1885	2195	2380	2380	2785	3080
E	(mm)	680	960	1240	1530	1800	2090	3350	3420
F	(mm)	1190	1490	1850	2410	2580	3080	4235	4415

The throughput rate depending on the type of material and screen used.
Our testing facility is available to perform tests on your material.

All technical specifications without guarantee Subject to technical changes without notice Last revised: June 2016 version 1.0

AMIS Maschinen-Vertriebs GmbH
Im Rohrbusch 15 · 74939 Zuzenhausen · Germany
info@amis.de · **www.amis.de**
Phone: +49 6226-7890-0
Fax: +49 6226-7890-222

amis®
RECYCLING TECHNOLOGY